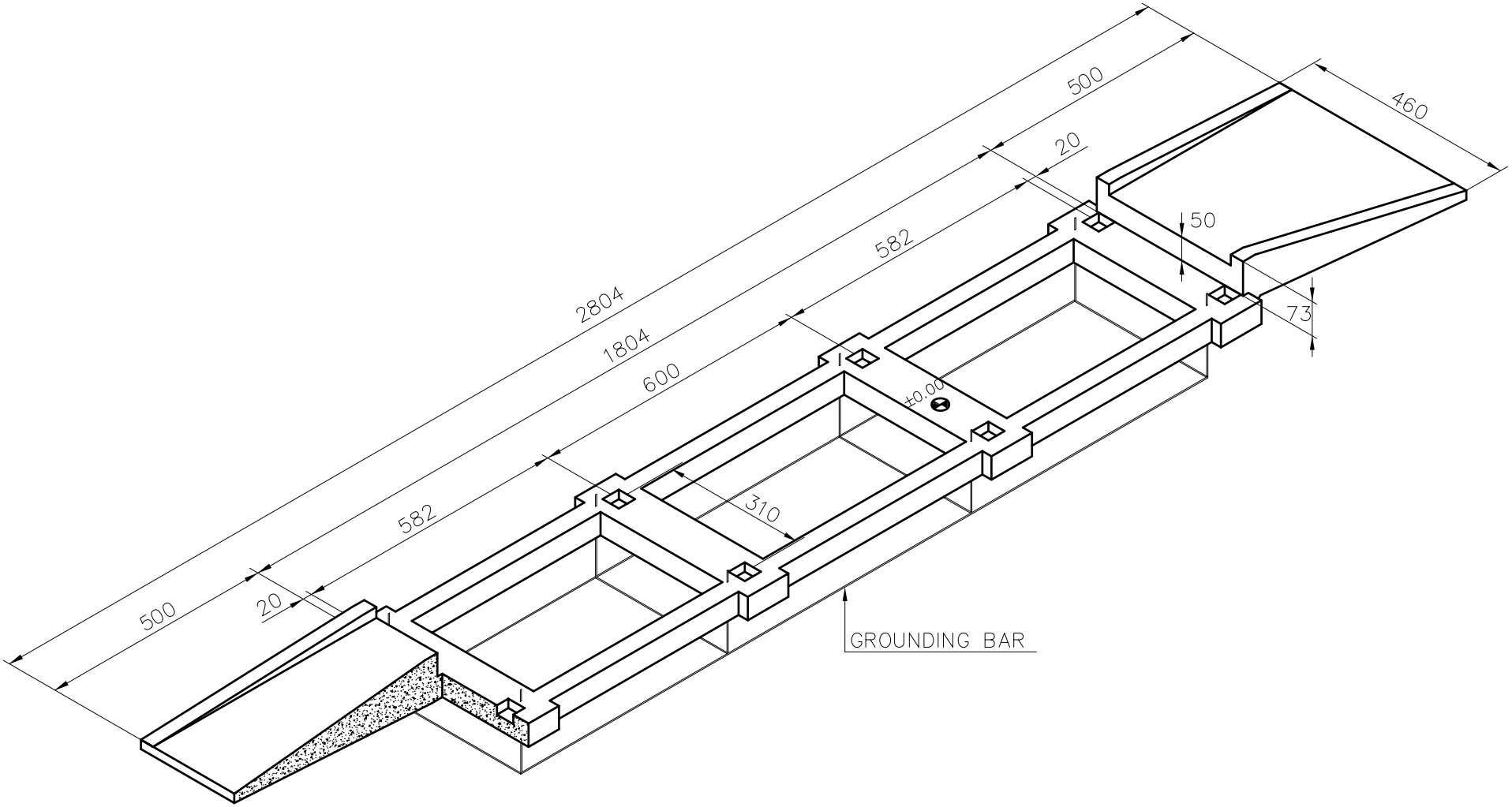

DRAWN BY: B.ÇINAR							
CONTROL: V.AKGÜN							
REVISION							DATE
A	B	C	D	E	F	G	16/12/2004

ESİT® LTD.

www.esitscale.com

DESCRIPTION

BRAND :ESİT

MODEL :3.5x18m 60-80t CS Truck Scale Foundation